Design and Development of Cylindrical Robot for Library Applications

[1]Abhith K B, [1]Bharath B, [1]Bharath Kumar H G, [1]Abhishek D K, [2]Dr K S Narayanaswamy
[1]Student, School of Mechanical Engineering, REVA University, Bengaluru, India
[2]Director and Professor, School of Mechanical Engineering, REVA University, Bengaluru, India

Abstract— A cylindrical coordinate system is a three-dimensional coordinate system that specifies point positions by the distance from a chosen reference axis, the direction from the axis relative to a chosen reference direction and the distance from a chosen reference plane perpendicular to the axis. The design of three degrees-of-freedom (DOF) cylindrical robot, covering the entire mechatronic process, involving kinematics, control design and optimizing methods. To accelerate the construction of the robot, 3D printing is used to fabricate few parts. The use of robots in library is becoming more popular in recent years. The trend seems to continue as long as the robotics technology meets diverse and challenging needs in educational purpose. This project will provide better service at input as well as output of library, in more elaborate form you have to just select the book at book issue counter book will come automatically to your end. The prototype consists of robotic arm along with grippers capable of moving in cylindrical work space and an ATMEGA 2560 microcontroller. Python is the Software used for programming, RFID is used for identifying the books and it has two IR Sensors for detecting the path. This would reduce the user efforts and save time. In this project we will implement practical knowledge of mechanical engineering. The goal of this project, library automation is to automatically issue books and important fact is that it provides security against theft.

Key words— Library, Cylindrical Robot, DOF, microcontroller, stepper motor, RFID, pick and place

1 Introduction

The cylindrical coordinate robot, uses a vertical column and a slide that can be moved up or down along the column. The robot arm is attached to the slide so that it can be moved radially with respect to the column. By rotating the column, the robot is capable of achieving a work space that approximates a cylinder.

The motion of the main arm is up and down. The robot can perform this motion by extending a cylinder that's built into the arm. In most cylindrical robots, the up-and-down motion is provided by a pneumatic cylinder, and the rotation is generally provided by a motor and gears.

A cylindrical coordinate system is a three-dimensional coordinate system that specifies point positions by the distance from a chosen reference axis. The origin of the system is the point where all three coordinates can be given as zero. This is the intersection between the reference plane and the axis.

The axis is variously called the cylindrical or longitudinal axis, to differentiate it from the polar axis, which is the ray that lies in the reference plane, starting at the origin and pointing in the reference direction.

The distance from the axis may be called the radial distance or radius, while the angular coordinate is sometimes referred to as the angular position or as the azimuth. The radius and the azimuth are together called the polar coordinates, as they correspond to a two-dimensional polar coordinate system in the plane through the point, parallel to the reference plane. The third coordinate may be called the height or altitude (if the reference plane is considered horizontal), longitudinal position, or axial position.

Cylindrical coordinates are useful in connection with objects and phenomena that have some rotational symmetry about the longitudinal axis, such as water flow in a straight pipe with round cross-section, heat distribution in a metal cylinder, electromagnetic fields produced by an electric current in a long, straight wire, and so on. It is sometimes called "cylindrical polar coordinate and "polar cylindrical coordinate", and is sometimes used to specify the position of stars in a galaxy.

1.2 Robots in Library

A library is a collection of information resources; it provides invaluable service to its members, to a wider local community. Typically we need a librarian to pick the book and handover it to the person to whom the books are being issued. This might be an easy task in case the library floor area is small. Also, to search for the books by humans take a lot of time as many a times the books gets overlooked the human eye. To overcome this problem we introduce automation in library to fast identification of books and for picking we suggest a robot with an arm with some degrees of freedom which will be able to find out the book with the required tag and then pick it and place it on the table.

2 Literature Survey

The main concept of this research is to deliver the book to the students using a robot in a library. This study is essential in order to increase the efficiency of delivering books to the student in library. In other words, it decreases the waiting time during peak hours. The robot uses a ATMEGA microcontroller to run a program with a combination of RFID technology, IR sensors for detecting the path, a simple gripper. The RFID reader is fixed on the robot itself, and reads the RFID tag which is placed on the Robot. The robot will deliver respective book to the student based on the tag. The main difference in the design of this serving robot as compared to the previous research is the application of RFID technology. The RFID application allows the robot to identify the right book that is to be served.

Scope of Research

In a library, each book has RFID tag so when student need a book he should place a respective RFID tag on the RFID reader. Then the robot identifies the RFID tag from the RFID reader and it displays the name of the book on LCD, each RFID tag has its own path. So the robot detects the respective path the by using IR sensors which placed on the robot and it follows the path and it fetches the respective book and delivers it to the student.

When we enter in library first we have to enter the name of book which we want to issue. The input is give through the switch. This information provides to the microcontroller AT mega 8.According to the information motor is moved and because of motor movement whole robotic structure is moved. RFID tag placed before the robot. RFID reader read the information of book saved in RFID tag. This information is sent to the microcontroller AT mega 8.Microcontroller again send this information to the motor through motor driver IC L293D.Robotic arm picks the book and carries the book to the issue counter.

2.1 OBJECTIVES

- To create solid part models and assembly by using Solid works software.
- To produce various parts using 3D printer.
- To accurately pick and place the objects in cylindrical geometry of workspace.
- To produce low cost and efficient Cylindrical Robot Design for library applications.

3 Methodology

The flowchart shows the methodology for design of Cylindrical Robot for Library Application.

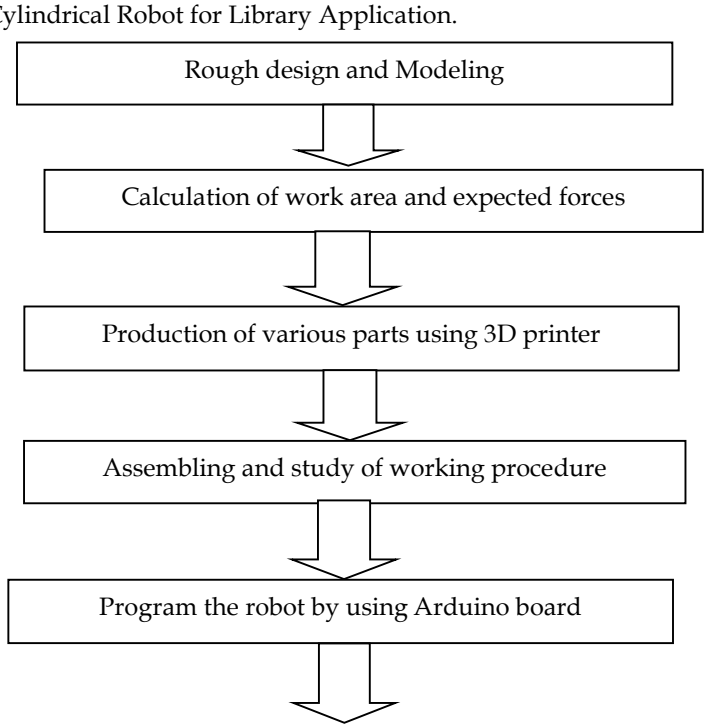

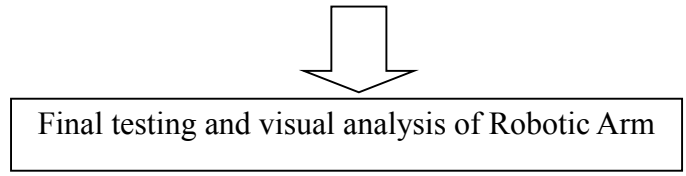

4 DESIGN AND MODELING

4.1 Design calculation:

1.Base plate(thickness)

The thickness of rectangular plate on which a concentrated load F acts at intersection of diagonals.

$$h = k\sqrt{\frac{a\,b\,F}{\sigma_{d(a^2+b^2)}}} \text{ .....(8-8)}$$

where: k= coefficient from table (8-3) = 1.73
FOS: 3

σ_d=design stress MPA = $\frac{\sigma_y}{FOS} = \frac{41.8}{3} = 13.86$

a =length of plate mm = 600 mm
b= breadth of plate mm = 600 mm
h = thickness

$$h=1.73\sqrt{\frac{600 \text{ X } 600 \text{ X } 15 \text{ X } 9.81}{13.86 \text{ X } (600^2+600^2)}}$$

h= 4mm

2. Screw Rod(load carrying capacity F)

Helix angle: $\alpha = \tan^{-1}\frac{l}{\pi d_2}$ ……..(18-26)

Where: d_2 = pitch diameter of thread = given dia - $\frac{\text{pitch}}{2}$

$= 8 - \frac{2}{2} = 7$

l = lead in mm = 8 mm

$\alpha = \tan^{-1}\frac{8}{\pi x 7}$ =19.99 ≈ 20°

Torque required to raise the load by power screw,

$$T = \frac{Wd_2}{2}\left(\frac{\mu\pi d_2 + l\cos\alpha}{\pi d_{2\cos\alpha - \mu l}}\right)$$

Where μ = coefficient of friction for power screws from table (18-4) = 0.07

T = 280 Nmm

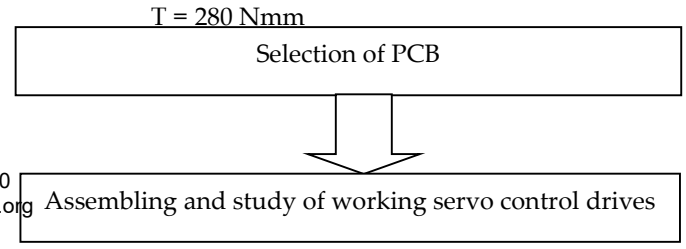

$$280 = \frac{F \times 7}{2}\left(\frac{0.07\pi 7 + 8\cos 20}{\pi 7 \cos 20 - 0.07 \times 8}\right)$$

F=177.58N

F=18.10kg

3. Pulley(velocity)

$$\text{Torque}, T = \frac{FD}{2\eta}$$

Where: F= force
D: dia of pulley=12.7mm
η:Effeciency of motor=95%
T=280mm

$$280 = \frac{F * 12.7}{2 * 0.95}$$

Load Carrying capacity ,F= 41.88N= 4.43Kg

Velocity, v = Π*D*Rpm

=3.142*12.7*300= 11969.5mm/min=199.5mm/sec

4. Pulley(Speed Ratio):

Large Pulley (A) No of Teeth = 60

Small Pulley (B) No of Teeth = 20

Pitch Diameter - Large Pulley (A) = 38.2mm

Pitch Diameter - Small Pulley (B) = 12.7mm

Speed Ratio = 38.2/12.7 = ~3.008

Torque Increase at Large Pulley = 280Nmm*3.008

=842.24Nmm

Note*:
G280Nmm = Torque of Stepper Motor is given by Manufacturer

4.2 Modeling

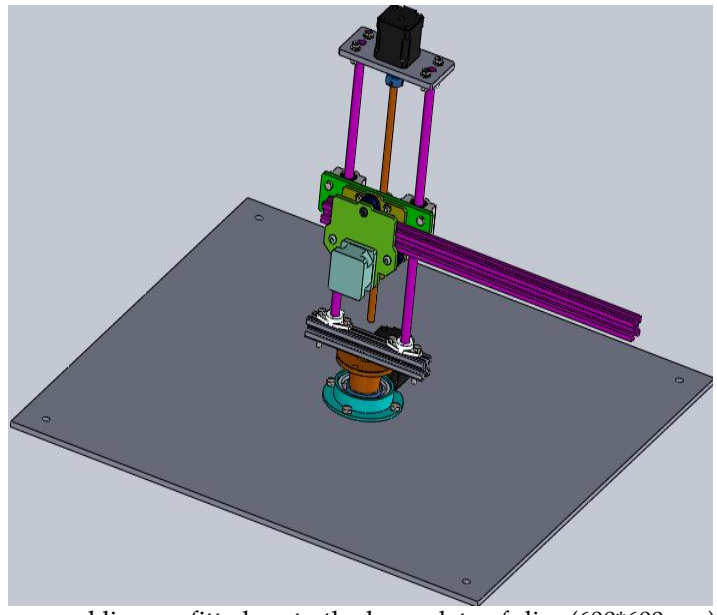

Fig.1 Final Assembly Model

The above figure is the isometric view of the final assembled model of the cylindrical robot where all the three sub-assemblies are fitted on to the base plate of dim (600*600mm). The complete design was done using solidworks software.

5 Robot Components

5.1 Mechanical Components

1. 20*20 Aluminum Profile
2. Acrylic Components
3. Flexible Coupling
4. GT2 60T Pulley
5. GT2 Belt-280
6. GT2 Belt
7. Wheel with Bearing
8. Rod 10
9. SC10UU Bearing
10. T8 Lead Screw with Nut

5.2 Electrical Components

1. Ar duino Mega microcontroller Board
2. CNC Sheild + A4988
3. Nema 17 Stepper Motor
4. Proximity Sensor
5. Switched Mode Power Supply
6. Tb6600 Stepper Motor Driver

6 Experimental Work

6.1 Robot Control System:

Robot control systems consists of 3 major sections,

1. Mechanical structure of the robot: Mechanical section includes, all mechanical parts such as Stepper motors, linkages, Supports, bearings, pulleys & belts, screw rod & guides rods etc.

2. Controller & Drives: Controller Drives incudes, Microcontroller & Stepper Drives used to control the movements & positions of Robots.

3. Control Software: Control Software is interfacing software used to teach the positions of the robot & Applications based on the requirements

6.2 Testing of Motor

Before the motor is implemented into the robot, it has to be tested to know the working condition of the motor. The testing of the motor was done in Aqmenz cylindrical robot control software.

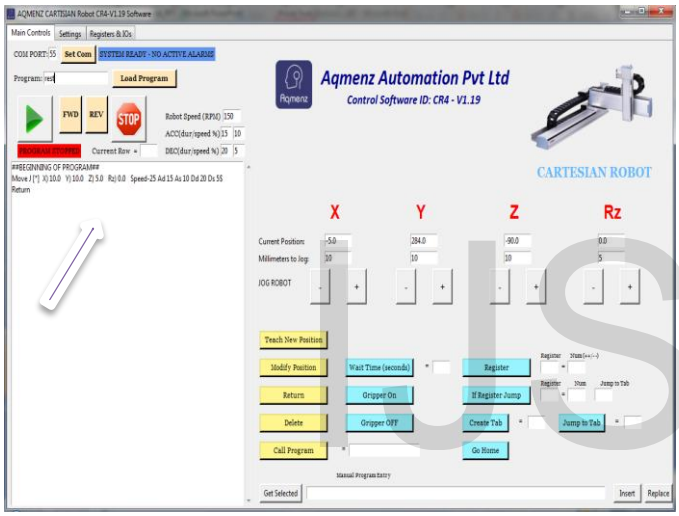

Fig.2 Robot control software

The motors are connected to the microcontroller, which is further connected to SMPS. The software computer by giving the value of X, θ, Z as shown in Fig.2 We can jog the robot by entering the jog distance in mm as shown above. By clicking '+' button we can jog in forward movement & using '-'button robot can jog in reverse direction. Hence we can conclude that the motors are running in good working condition.

6.3 Mechanical part assembly

The mechanical components required for the robot were accurately made by different machining processes. Some of the components were directly brought from the market and some parts were manufactured using a 3D printer. After this the different parts where assembled mechanically as per the above design configurations. The cut parts are assembled together with the NEMA 17 motors and assembly of the robot arm is completed. The robot arm moves by 3 joints and performs this movement with 3 Mini Stepper Motor.

There is one stepper motor in the stationary lower part of the robot arm and this forms the rotary joint. This joint provides rotation of the robot arm to the right or left. There are two stepper motors in the moving upper body part. Since these stepper motors must operate parallel to each other, both start and end positions are set simultaneously. These two stepper motors are connected to the X axis and Z axis respectively. The task of 2nd motor is to move the robot arm up and down and the task of the 3rd motor is to move the robot arm to the left and right positions.

The components here used are arduino board, CNC Sheild + A4988, Proximity Sensor, Tb6600 Stepper Motor Driver, NEMA 17 stepper motor . Now talking about stepper motors they are excessively used when there is a need for an accurate shaft movement or position. These are not proposed for high speed applications. Stepper motors are proposed for low speed, medium torque and accurate position application. So they are best for designing robotic arm. Stepper motor are available at different shapes and sizes. We are going to use NEMA 17 Stepper motors (three). A stepper motor will have mainly three wires positive voltage another is for ground and the last one is for position setting. The red wire is connected to power, the brown wire is grounded and the orange wire is for signal.

1. The arm has been built with cardboards and the individual parts have been locked to servo motors. Arduino is programmed to control stepper motors. Stepper motors are acting as joints of Robotic arm here.

2. This Robotic Arm is controlled by three Arduino Stepper Motor Driver which is attached to each stepper motor. We can move these motors by rotating the stepper motor to pick some object, with some practice we can easily pick and move the object from one place to another. Here we use low torque motors, but we can use more powerful servos to pick heavy object.

3. We connect the circuit according to circuit diagram shown below.

Fig.3Line Diagram of Conection between Aurdino MC and Stepper Motor

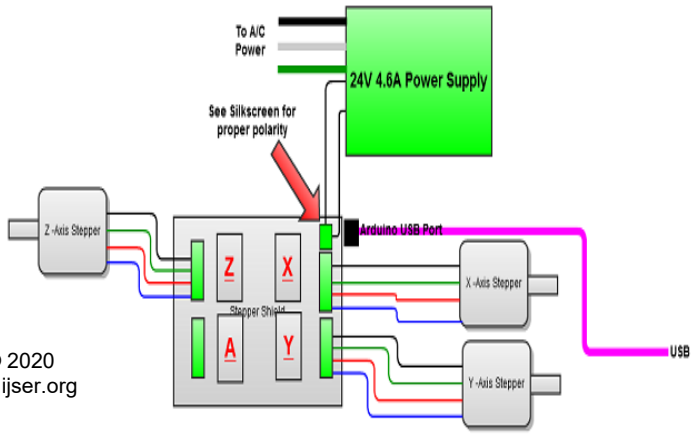

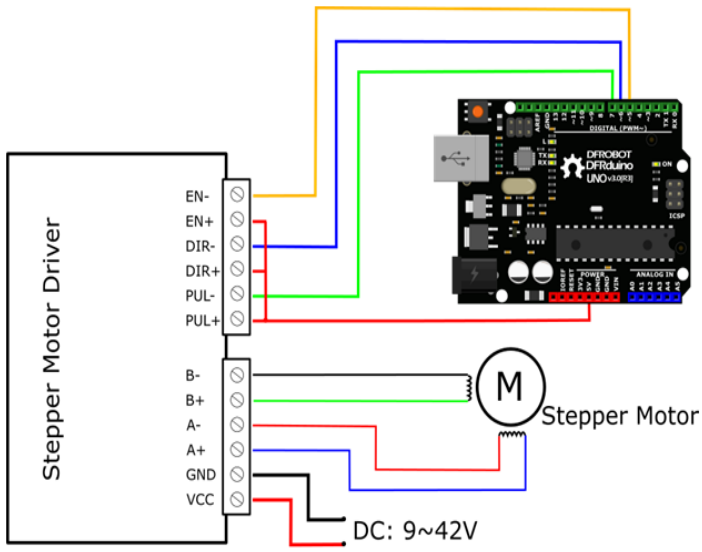

Fig.4 Line Diagram of Connection between Stepper Motor and TB6600 Stepper Motor Drive

6.4 Programming software

Our Project involves two major Software Parts,

1. Arduino Programming
2. Python based Control Software

Arduino Programming:

The main control system of the project is the Microcontroller which controls the movements of the robot by driving Stepper motors with respect to the robot kinematics. Arduino Microcontroller board is used in this project which is programmed in such a way that robot can move depends on the input received from the python based control software from PC.

The hardware components which are used are programmed by means of the software tools. The various software which are included are presented briefly. The software used to program the microcontroller is Arduino IDE.

Python based Control Software:

This the User interface software which guides the robot to move to required position based on the kinematics of the robot by sending x, y & z position commands to Robot.

7 Result

Starting with rough drawings of robotic arm and by using a 3D Parts & Aluminium profiles, model is created to find its working area, movements and degrees of freedom. The designed model working has been studied by moving all links with respect to its motions (Linear and Rotary) with the help of DC stepper motors. During this experimental study it is found that the model is working as per the required movements and motions of the links and end effector successfully. The type of parts required, quantity of motors and location where motor is to be fitted can be identified from experimental model.

8 Conclusion

We have presented the design of a low-cost cylindrical robot useful for manipulation research. In gearing, we traded off the space and complexity of a timing belt and zero-backlash cable drive circuit in place of the cost of an expensive gear head. In motor selection, we used stepper motors for their high torque at low speeds, in exchange for a highly-reduced brushless or brushed motor. These design tradeoffs were chosen for the envisioned target application of robots interacting with unstructured environments such as a typical home or workplace, where the safety of intrinsic mechanical compliance is an important design consideration. The cost- controlling tradeoffs described in this paper were made as an effort towards designing affordable compliant manipulators, an area of research which, to date, has received little attention, and which we propose could have a large impact on the speed of adoption of robots into library and workplaces.

9 FUTURE SCOPE

- Future enhancement can include further improvement that is by adding 360 degree rotary servo motor and making it more stable. Setup can be modified that will pick more weight compared to present model.
- Ultrasonic sensor can even be placed on the arm so that it can detect and simultaneously pick the object and keep it on other place.

10 References

[1] Anita Gade, Yogesh Angal "Development of Library Management Robotic System", International Conference on Data Management, Analytics and Innovation, Feb 24-26, 2017
[2] Tarkesh S Pujari, S B Deosarkar "Design of Intelligent and Robotic Library System", International Conference on Recent Trends in Electronics Information & Communication Technology (RTEICT), May 19-20 2017.
[3] Masahiko Mikawa, Yuya Morimoto and Kazuyo Tanaka "Guidance Method Using Laser Pointer and Gestures for Librarian Robot", IEEE International Symposium on Robot and Human Interactive Communication Sept. 12-15, 2018.
[4] Jia Liu, Feng Zhu "RF-Scanner: Shelf Scanning with Robot-assisted RFID Systems", IEEE INFOCOM 2017 - IEEE Conference on Computer Communications 2017.
[5] Deepthi Unnikrishnan, Aswani C R, Arjun K Jayaprakash and

Ganesh S "Library Assistat Robot", International Journal of Engineering Research & Technology (IJERT), Vol. 6 Issue 01, January-2017.

[6] B.R.Sathishkumar, M.Krishnaprabha, S.Priya, M.Ragavi "Automated Library System using Android Based Robot", International Journal of Recent Technology and Engineering (IJRTE), , Volume-8 Issue-2, July 2019.

[7] Sundara mahalingam .V, Saravanan Aravind, Tharini devi.R "Smart Robots in library management system", International Journal of Innovative and Emerging Research in Engineering, Volume 4, Special Issue,June 2017.

[8] Bomble Pranit R, G. Dipika, ShaikhMeeravali "Library Management Robot", International Journal of Recent Technology and Engineering, Vol-1 Issue-3 2015.

[9] Md. Anisur Rahman,Alimul Haque Khan, Dr. Tofayel Ahmed,Md. Mohsin Sajjad, "Design, Analysis and Implementation of a Robotic Arm- TheAnimator", American Journal of Engineering Research (AJER), Volume-02, Issue-10 2013.

[10] Anusha Ronanki , M. Kranthi , "Design and Fabrication of Pick and PlaceRobot to Be Used in Library", International Journal of Innovative Research in Science,Engineering and Technology, Vol. 4, Issue 6, June 2015.

[11] P.S.Ramaiah, M.Venkateswara Rao, G.V.Satyanarayana, "A Microcontroller Based Four Fingered Robotic Hand", International Journal of Artificial Intelligence & Applications (IJAIA), Vol.2, No.2, April 2011.

[12] Biswas Palok, S. Anandan Shanmugam, "Design and Development of a 3 axes Pneumatic Robotic Arm", International Journal of Advanced Research in Electrical, Electronics and Instrumentation Engineering, Vol. 5, Issue 9, September 2016.

[13] Lambèr Royakker, Rinie van Est, "A Literature Review on New Robotics: Automation from Love to War", Internatonal Journal of Soc Robotics, 9 April 2015

[14] James PrasadaRao.B , Anusha Ronanki , Bharath Uppalancha, "Design and Fabrication of A Pick and Place Robot for a Library", IJARIIE-ISSN, Vol-2 Issue-2 2016.

[15] ONO Kazuya, HAYASHI Toshihiro, FUJII Masakazu, "Development for Industrial Robotics Applications", Engineering Review, vol.42, No2 2009.

[16] B.O.Omijeh , "Design analysis of remote controlled pick and place robotic vehicle", International Journal of Engineering Research and Development, volume 10 , issue 4.